CROSSWATER BUILDING MATERIALS LLC

FIBERGLASS DOOR
(WZ3) (IMPACT)

GENERAL NOTES:

1. THE PRODUCT SHOWN HEREIN IS DESIGNED AND MANUFACTURED TO COMPLY WITH THE CURRENT EDITION OF THE FLORIDA BUILDING CODE (FBC) **EXCLUDING** HVHZ. ALL PRODUCTS UNDER THE SCOPE OF THIS DOCUMENT HAVE BEEN EVALUATED ACCORDING TO THE FOLLOWING:
   - TAS 201-94
   - TAS 202-94
   - TAS 203-94

2. ADEQUACY OF THE EXISTING STRUCTURAL CONCRETE/MASONRY, 2X AND METAL STUD FRAMING AS A MAIN WIND FORCE RESISTING SYSTEM CAPABLE OF WITHSTANDING AND TRANSFERRING APPLIED PRODUCT LOADS TO THE FOUNDATION IS THE RESPONSIBILITY OF THE ENGINEER OR ARCHITECT OF RECORD FOR THE PROJECT OF INSTALLATION.

3. 1X AND 2X BUCKS (WHEN USED) SHALL BE DESIGNED AND ANCHORED TO PROPERLY TRANSFER ALL LOADS TO THE STRUCTURE. BUCK DESIGN AND INSTALLATION IS THE RESPONSIBILITY OF THE ENGINEER OR ARCHITECT OF RECORD FOR THE PROJECT OF INSTALLATION.

4. THE INSTALLATION DETAILS DESCRIBED HEREIN ARE GENERIC AND MAY NOT REFLECT ACTUAL CONDITIONS FOR A SPECIFIC SITE. IF SITE CONDITIONS CAUSE INSTALLATION TO DEVIATE FROM THE REQUIREMENTS DETAILED HEREIN, A LICENSED ENGINEER OR ARCHITECT SHALL PREPARE SITE SPECIFIC DOCUMENTS FOR USE WITH THIS DOCUMENT.

5. APPROVED IMPACT PROTECTIVE SYSTEM **IS NOT REQUIRED** TO PROTECT THIS PRODUCT IN AREAS REQUIRING IMPACT RESISTANCE IN WIND ZONE 3 OR LESS.

6. APPROVED IMPACT PROTECTIVE SYSTEM **IS REQUIRED** TO PROTECT THIS PRODUCT IN AREAS REQUIRING IMPACT RESISTANCE IN WIND ZONE 4.

7. FRAME MATERIAL: WOOD PLASTIC COMPOSITE.

8. DOOR SKIN MATERIAL: FIBERGLASS.

9. GLASS MEETS THE REQUIREMENTS OF ASTM E 1300 GLASS CHARTS. SEE SHEET 1 FOR GLAZING DETAIL.

10. ALL STRUCTURAL MATERIALS & DISSIMILAR METALS SHALL BE PROTECTED, TREATED, PAINTED, COATED, AND/OR ISOLATED AS REQUIRED IN THE APPLICABLE SECTIONS OF THE CURRENT FLORIDA BUILDING CODE AND REFERENCED DESIGN SPECIFICATIONS.

TABLE OF CONTENTS

SHEET	SHEET DESCRIPTION
1	GENERAL NOTES AND GLAZING DETAIL
2	TYPICAL ELEVATION AND ANCHOR LAYOUT
3	VERTICAL SECTIONS
4	HORIZONTAL SECTIONS
5	INSTALLATION DETAIL AND NOTES

FRAME SIZE	DESIGN PRESSURE	IMPACT MISSILE RATING
37-1/2" x 81-5/16"	+/- 50 PSF	LARGE & SMALL MISSILE IMPACT

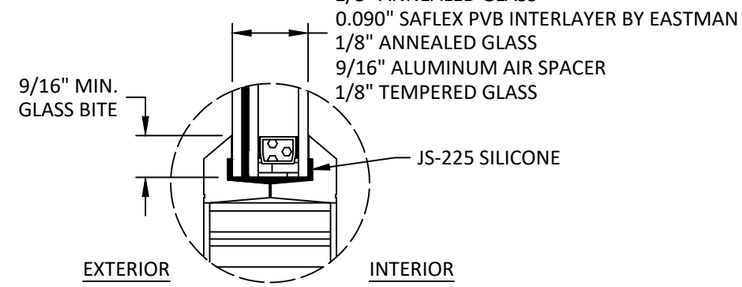

GLAZING DETAIL

GLAZING NOTES:
1. GLASS TYPE & THICKNESS COMPLIES WITH ASTM E1300 REQUIREMENTS. TEMPER AND SAFETY GLAZING REQUIREMENTS SHALL BE REVIEWED ON A SITE SPECIFIC BASIS.
2. SETTING BLOCK DUROMETER HARDNESS OF 70-90 (SHORE A) AS REFERENCED IN FBC CHAPTER 24.
3. SETTING BLOCKS TO BE LOCATED AT 1/4 SPAN LENGTH FOR GLASS WIDER THAN 36" AS PER FBC CHAPTER 24.
4. D.L.O. AND DESIGN PRESSURES MAY NOT EXCEED MAX VALUES IN SHEET 2.

CROSSWATER Building Materials

CROSSWATER BUILDING MATERIALS LLC
8341 EPICENTER BLVD.
LAKELAND, FL 33809
PH: (813) 310-7345

TITLE: FIBERGLASS DOOR (WZ3) (IMPACT) GENERAL NOTES & GLAZING DETAIL

PREPARED BY: BUILDING DROPS, INC.
1900 NE MIAMI COURT, SUITE 2-15
MIAMI, FL 33132
PH: (954) 399-8478
FAX: (954) 744-4738
WEB: www.buildingdrops.com

REMARKS	BY	DATE
2026 FBC UPDATE	LS	06/26

THE INSTALLATION DETAILS DESCRIBED HEREIN ARE GENERIC AND MAY NOT REFLECT ACTUAL CONDITIONS FOR A SPECIFIC SITE. IF SITE CONDITIONS CAUSE INSTALLATION TO DEVIATE FROM THE REQUIREMENTS DETAILED HEREIN, A LICENSED ENGINEER OR ARCHITECT SHALL PREPARE SITE SPECIFIC DOCUMENTS FOR USE WITH THIS DOCUMENT.

Digitally signed by Hermes F. Norero, P.E.
Reason: I am approving this document
Date: 2026.08.11 13:50:38 -03'00'

HERMES F. NORERO LICENSE No. 73778 STATE OF FLORIDA PROFESSIONAL ENGINEER

HERMES F. NORERO, P.E.
FLORIDA P.E. No 73778
BUILDING DROPS, INC
1900 NE MIAMI COURT, SUITE 2-15
MIAMI, FL 33132
FBPE CERT. OF AUTHORIZATION No. 29578

FL #: FL47789

DATE: 08.28.2025

DWG. BY: JR | CHK. BY: HFN

SCALE: NTS

DWG. #: CBM002

SHEET: 1 OF 5 | REV. A

8/11/2026 8:30 AM
c:\users\mengqisun\building drops, inc\building drops landing - common\projects\2026 code change projects\crosswater building materials llc\cc-26-6119 - 2026 code change\dwgs\cbm002.dwg

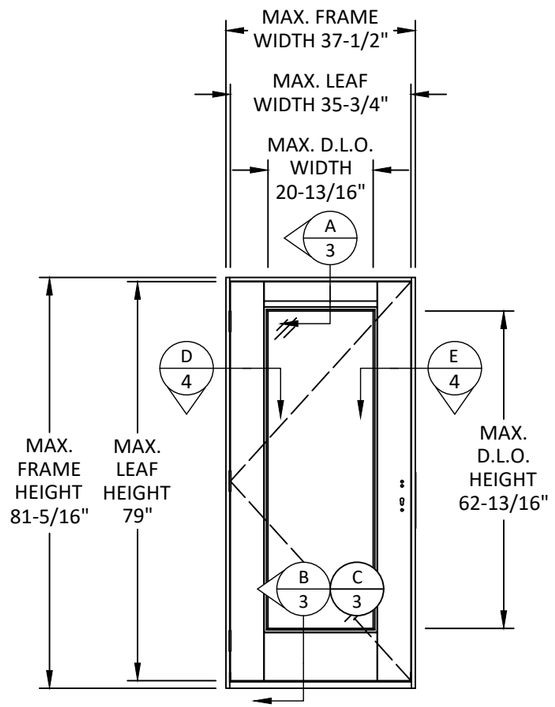

TYPICAL ELEVATION

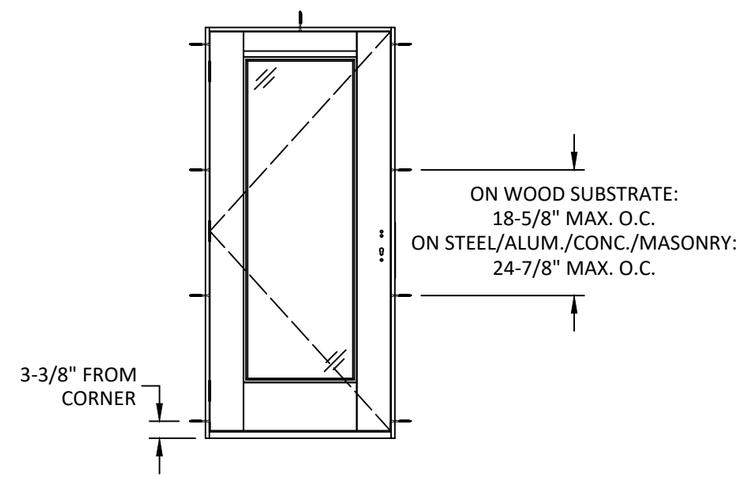

ANCHOR LAYOUT

CROSSWATER Building Materials

CROSSWATER BUILDING MATERIALS LLC
8341 EPICENTER BLVD.
LAKELAND, FL 33809
PH: (813) 310-7345

TITLE: FIBERGLASS DOOR (WZ3) (IMPACT)
TYPICAL ELEVATION & ANCHOR LAYOUT

PREPARED BY:
BUILDING DROPS, INC.
1900 NE MIAMI COURT, SUITE 2-15
MIAMI, FL 33132
PH: (954) 399-8478
FAX: (954) 744-4738
WEB: www.buildingdrops.com
BUILDING DROPS

REMARKS	BY	DATE
2026 FBC UPDATE	LS	06/26

THE INSTALLATION DETAILS DESCRIBED HEREIN ARE GENERIC AND MAY NOT REFLECT ACTUAL CONDITIONS FOR A SPECIFIC SITE. IF SITE CONDITIONS CAUSE INSTALLATION TO DEVIATE FROM THE REQUIREMENTS DETAILED HEREIN, A LICENSED ENGINEER OR ARCHITECT SHALL PREPARE SITE SPECIFIC DOCUMENTS FOR USE WITH THIS DOCUMENT.

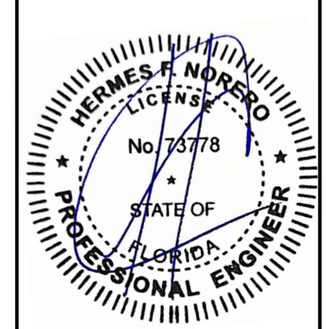

HERMES F. NORERO, P.E.
FLORIDA P.E. No 73778
BUILDING DROPS, INC
1900 NE MIAMI COURT, SUITE 2-15
MIAMI, FL 33132
FBPE CERT. OF AUTHORIZATION No. 29578

FL #: FL47789

DATE: 08.28.2025

DWG. BY: JR | CHK. BY: HFN

SCALE: NTS

DWG. #: CBM002

SHEET: 2 OF 5 | REV. A

8/11/2026 8:30 AM
c:\users\mergdsun\building drops, inc\building drops landing - common\projects\2026 code change projects\crosswater building materials llc\cc-26-6119 - 2026 code change\dwgs\cbm002.dwg

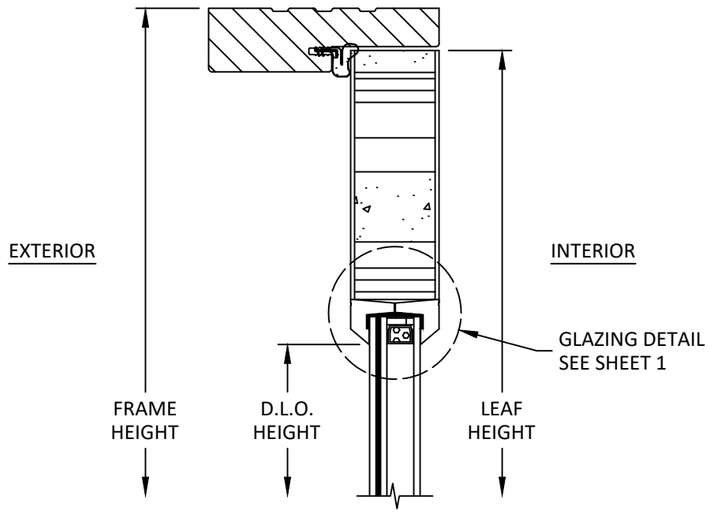

A/3 VERTICAL SECTION

DOOR HEAD

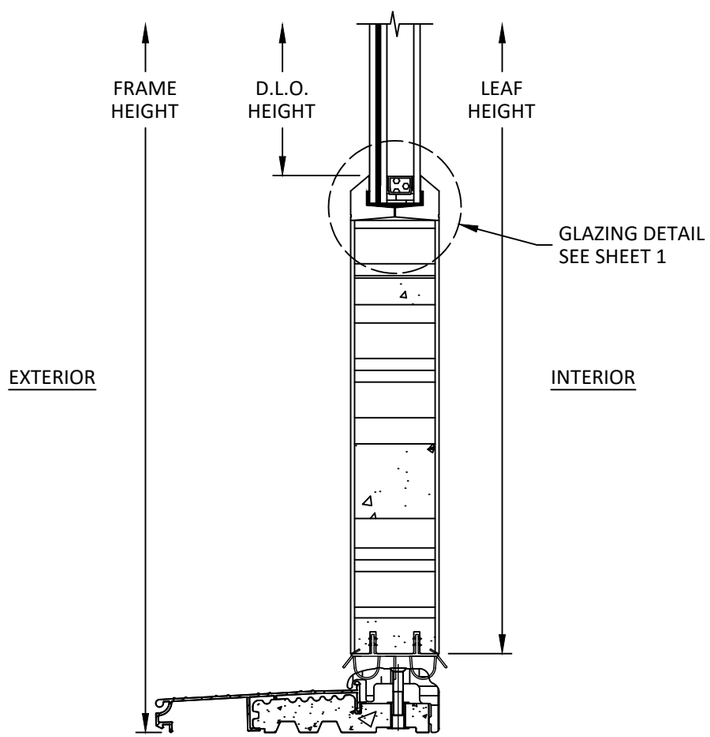

B/3 VERTICAL SECTION

DOOR STANDARD SILL

NOTE:
4-9/16" FRAME AND 5-5/8" THRESHOLD ARE SHOWN, ALTERNATE FRAMES AND THRESHOLDS WITH LARGER DEPTHS ARE ALSO QUALIFIED, SEE MANUFACTURER'S INFORMATION FOR DETAILS.

* DOOR WITH ADA SILL HAS NOT BEEN RATED FOR WATER INFILTRATION. IF AUTHORITY HAVING JURISDICTION REQUIRES THAT PRODUCT MEETS THIS REQUIREMENT, PRODUCT SHALL BE USED WHEN INSTALLED AT LOCATION PROTECTED BY OVERHANG SUCH THAT:

$$\text{OVERHANG (OH) RATIO} = \frac{\text{OH LENGTH}}{\text{OH HEIGHT}} \geq 1.0$$

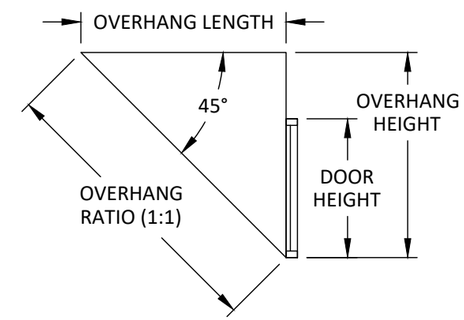

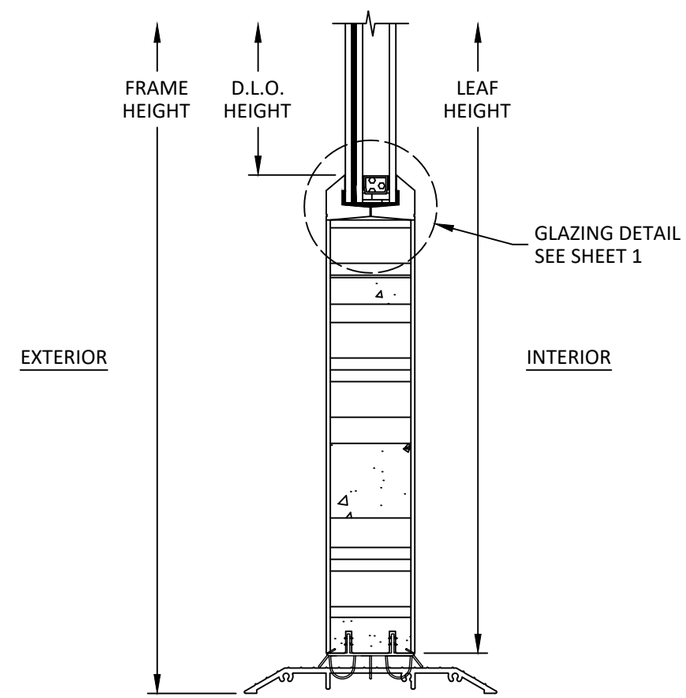

C/3 VERTICAL SECTION

DOOR ADA SILL*

CROSSWATER Building Materials

CROSSWATER BUILDING MATERIALS LLC
8341 EPICENTER BLVD.
LAKELAND, FL 33809
PH: (813) 310-7345

TITLE: FIBERGLASS DOOR (WZ3) (IMPACT)
VERTICAL SECTIONS

PREPARED BY: BUILDING DROPS, INC.
1900 NE MIAMI COURT, SUITE 2-15
MIAMI, FL 33132
PH: (954) 399-8478
FAX: (954) 744-4738
WEB: www.buildingdrops.com

REMARKS	BY	DATE
2026 FBC UPDATE	LS	06/26

THE INSTALLATION DETAILS DESCRIBED HEREIN ARE GENERIC AND MAY NOT REFLECT ACTUAL CONDITIONS FOR A SPECIFIC SITE. IF SITE CONDITIONS CAUSE INSTALLATION TO DEVIATE FROM THE REQUIREMENTS DETAILED HEREIN, A LICENSED ENGINEER OR ARCHITECT SHALL PREPARE SITE SPECIFIC DOCUMENTS FOR USE WITH THIS DOCUMENT.

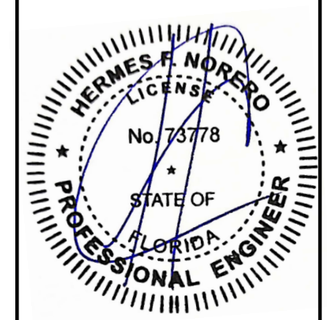

HERMES F. NORERO, P.E.
FLORIDA P.E. No 73778
BUILDING DROPS, INC
1900 NE MIAMI COURT, SUITE 2-15
MIAMI, FL 33132
FBPE CERT. OF AUTHORIZATION No. 29578

FL #: FL47789

DATE: 08.28.2025

DWG. BY: JR | CHK. BY: HFN

SCALE: NTS

DWG. #: CBM002

SHEET: 3 OF 5 | REV. A

8/11/2026 8:30 AM
c:\users\mengqisun\building drops, inc\building drops landing - common\projects\2026 code change projects\crosswater building materials llc\cc-26-6119 - 2026 code change\dwgs\cbm002.dwg

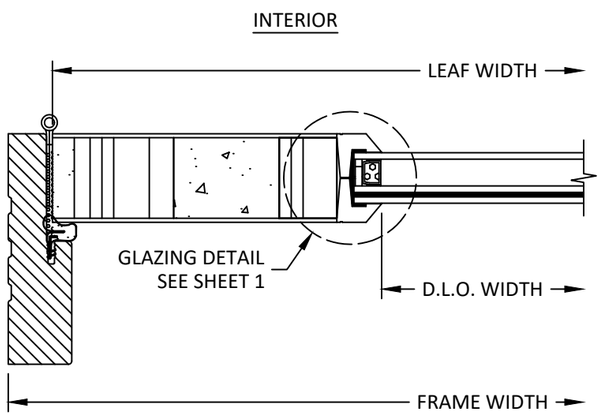

D/4 HORIZONTAL SECTION
DOOR HINGE JAMB

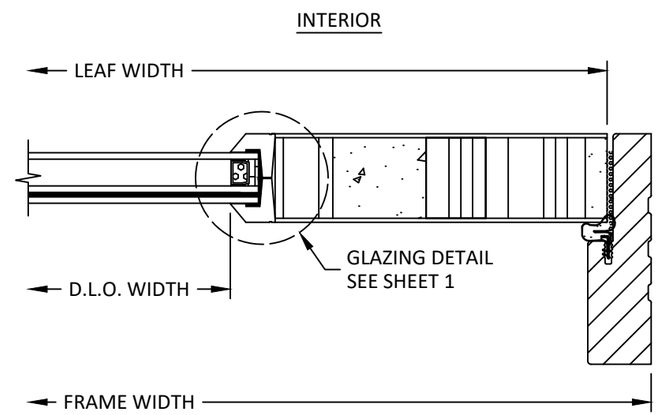

E/4 HORIZONTAL SECTION
DOOR LOCK JAMB

NOTE:
4-9/16" FRAMEIS SHOWN, ALTERNATE FRAMES WITH LARGER DEPTHS ARE ALSO QUALIFIED, SEE MANUFACTURER'S INFORMATION FOR DETAILS.

CROSSWATER Building Materials

CROSSWATER BUILDING MATERIALS LLC
8341 EPICENTER BLVD.
LAKELAND, FL 33809
PH: (813) 310-7345

TITLE: FIBERGLASS DOOR (WZ3) (IMPACT)
HORIZONTAL SECTIONS

PREPARED BY: BUILDING DROPS, INC.
1900 NE MIAMI COURT, SUITE 2-15
MIAMI, FL 33132
PH: (954) 399-8478
FAX: (954) 744-4738
WEB: www.buildingdrops.com
BUILDING DROPS

REMARKS	BY	DATE
2026 FBC UPDATE	LS	06/26

THE INSTALLATION DETAILS DESCRIBED HEREIN ARE GENERIC AND MAY NOT REFLECT ACTUAL CONDITIONS FOR A SPECIFIC SITE. IF SITE CONDITIONS CAUSE INSTALLATION TO DEVIATE FROM THE REQUIREMENTS DETAILED HEREIN, A LICENSED ENGINEER OR ARCHITECT SHALL PREPARE SITE SPECIFIC DOCUMENTS FOR USE WITH THIS DOCUMENT.

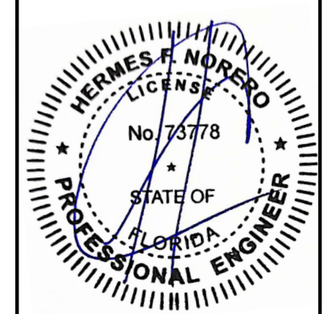

HERMES F. NORERO, P.E.
FLORIDA P.E. No 73778
BUILDING DROPS, INC
1900 NE MIAMI COURT, SUITE 2-15
MIAMI, FL 33132
FBPE CERT. OF AUTHORIZATION No. 29578

FL #: FL47789
DATE: 08.28.2025
DWG. BY: JR
CHK. BY: HFN
SCALE: NTS
DWG. #: CBM002
SHEET: 4
REV. A
OF 5

8/11/2026 8:30 AM
c:\users\mengalsun\building drops, inc\building drops landing - common\projects\2026 code change projects\crosswater building materials llc\cc-26-6119 - 2026 code change\dwgs\cbm002.dwg

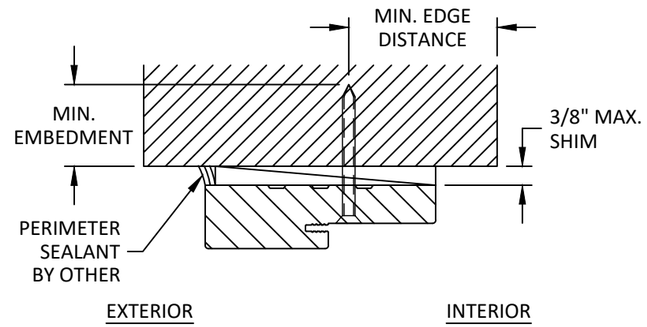

F/5 INSTALLATION DETAIL

DOOR HEAD
HEAD SHOWN, JAMB SIMILAR

INSTALLATION NOTES:

1. ONE (1) INSTALLATION ANCHOR IS REQUIRED AT EACH ANCHOR LOCATION.
2. THE NUMBER OF INSTALLATION ANCHORS DEPICTED IS THE MINIMUM NUMBER OF ANCHORS TO BE USED FOR PRODUCT INSTALLATION OF THE MAXIMUM SIZE LISTED.
3. INSTALL INDIVIDUAL INSTALLATION ANCHORS WITHIN A TOLERANCE OF ±1/4 INCH THE DEPICTED LOCATION & SPACING IN THE ANCHOR LAYOUT DETAILS (I.E., WITHOUT CONSIDERATION OF TOLERANCES). TOLERANCES ARE NOT CUMULATIVE FROM ONE INSTALLATION ANCHOR TO THE NEXT.
4. SHIM AS REQUIRED AT EACH INSTALLATION ANCHOR WITH LOAD BEARING SHIM(S). MAXIMUM ALLOWABLE SHIM STACK TO BE 3/8 INCH. SHIM WHERE SPACE OF 1/16 INCH OR GREATER OCCURS. SHIM(S) SHALL BE CONSTRUCTED OF WOOD OR BETTER.
5. FOR MASONRY OR CONCRETE OPENINGS, A 1X WOOD BUCK MAY BE USED (OPTIONAL) AS LONG AS THE MINIMUM EMBEDMENT AND EDGE DISTANCE REQUIREMENTS ARE STILL MET WITHIN THE CORRESPONDING HOST SUBSTRATE. SEE GENERAL NOTE #3 ON SHEET 1 FOR MORE INFORMATION.
6. MINIMUM EMBEDMENT AND EDGE DISTANCE EXCLUDE WALL FINISHES, INCLUDING BUT NOT LIMITED TO STUCCO, FOAM, BRICK VENEER, AND SIDING.
7. INSTALLATION ANCHORS AND ASSOCIATED HARDWARE MUST BE MADE OF CORROSION RESISTANT MATERIAL OR HAVE A CORROSION RESISTANT COATING:
   - FASTENERS USED WITHIN 3,000 FEET OF A SALTWATER COASTLINE AND INSTALLED IN ENCLOSED SPACES SHALL BE GALVANIZED IN ACCORDANCE WITH SECTION 1711.1.1 (E.G., ASTM A153 CLASS D, ASTM A641 CLASS 3S, OR EQUIVALENT CORROSION RESISTANCE).
   - CONNECTORS AND METAL PLATES USED WITHIN 3,000 FEET OF A SALTWATER COASTLINE SHALL BE STANDARD GALVANIZED IN ACCORDANCE WITH SECTION 1711.1.2 (E.G., ASTM A653 G90, ASTM A123, OR PROTECTIVE COATING PER TPI 1).
8. FOR HOLLOW BLOCK AND GROUT FILLED BLOCK, DO NOT INSTALL INSTALLATION ANCHORS INTO MORTAR JOINTS. EDGE DISTANCE IS MEASURED FROM FREE EDGE OF BLOCK OR EDGE OF MORTAR JOINT INTO FACE SHELL OF BLOCK.
9. INSTALLATION ANCHORS SHALL BE INSTALLED IN ACCORDANCE WITH ANCHOR MANUFACTURER'S INSTALLATION INSTRUCTIONS AND ANCHORS SHALL NOT BE USED IN SUBSTRATES WITH STRENGTHS LESS THAN THE MINIMUM STRENGTH SPECIFIED BY THE ANCHOR MANUFACTURER.

ANCHOR SCHEDULE

SUBSTRATE	ANCHOR TYPE	MIN. EMBEDMENT	MIN. EDGE DISTANCE
WOOD: MIN. S.G. = 0.55	#10 WOOD SCREW	1-1/2"	1"
STEEL: MIN. 18 GA. MIN. Fy = 33 ksi	#10 GRADE 5 SELF-DRILLING/ SELF-TAPPING SCREW	3 THREADS MIN PENETRATION BEYOND METAL	1/2"
ALUMINUM: MIN. 1/8" THICK MIN. 6063-T5			
CONCRETE: MIN. f'c = 3000 psi	3/16" ITW TAPCON	1"	1-1/4"
MASONRY: CMU per ASTM C90 MIN. 2000 PSI		1"	2"

CROSSWATER Building Materials

CROSSWATER BUILDING MATERIALS LLC
8341 EPICENTER BLVD.
LAKELAND, FL 33809
PH: (813) 310-7345

TITLE: FIBERGLASS DOOR (WZ3) (IMPACT) INSTALLATION DETAIL & NOTES

PREPARED BY: BUILDING DROPS, INC.
1900 NE MIAMI COURT, SUITE 2-15
MIAMI, FL 33132
PH: (954) 399-8478
FAX: (954) 744-4738
WEB: www.buildingdrops.com
BUILDING DROPS

REMARKS	BY	DATE
2026 FBC UPDATE	LS	06/26

THE INSTALLATION DETAILS DESCRIBED HEREIN ARE GENERIC AND MAY NOT REFLECT ACTUAL CONDITIONS FOR A SPECIFIC SITE. IF SITE CONDITIONS CAUSE INSTALLATION TO DEVIATE FROM THE REQUIREMENTS DETAILED HEREIN, A LICENSED ENGINEER OR ARCHITECT SHALL PREPARE SITE SPECIFIC DOCUMENTS FOR USE WITH THIS DOCUMENT.

HERMES F. NORERO LICENSE No. 73778 STATE OF FLORIDA PROFESSIONAL ENGINEER

HERMES F. NORERO, P.E.
FLORIDA P.E. No 73778
BUILDING DROPS, INC
1900 NE MIAMI COURT, SUITE 2-15
MIAMI, FL 33132
FBPE CERT. OF AUTHORIZATION No. 29578

FL #: FL47789

DATE: 08.28.2025

DWG. BY: JR | CHK. BY: HFN

SCALE: NTS

DWG. #: CBM002

SHEET: 5 OF 5 | REV. A

8/11/2026 8:30 AM
c:\users\mengqisun\building drops, inc\building drops landing - common\projects\2026 code change projects\crosswater building materials llc\cc-26-6119 - 2026 code change\dwgs\cbm002.dwg